3-AXIS CNC MOTION

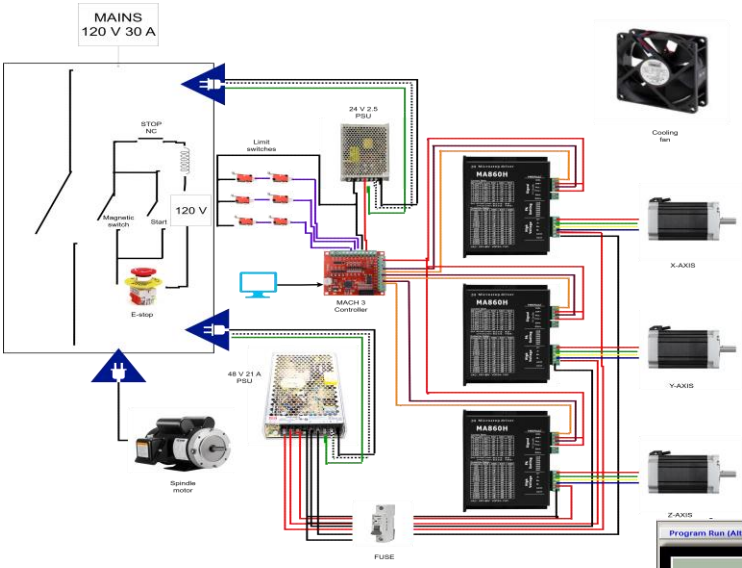

Complete CNC Wiring Diagram for 3-Axis Motion of the shaft. The design included the safety features like E-Stop and limit switches. The NEMA 34 Motors were controlled using stepper drivers.

The motion of the NEMA 34 motors was calibrated in the MACH3 Software. G-Code for any CNC weld job is generated & run in this software.

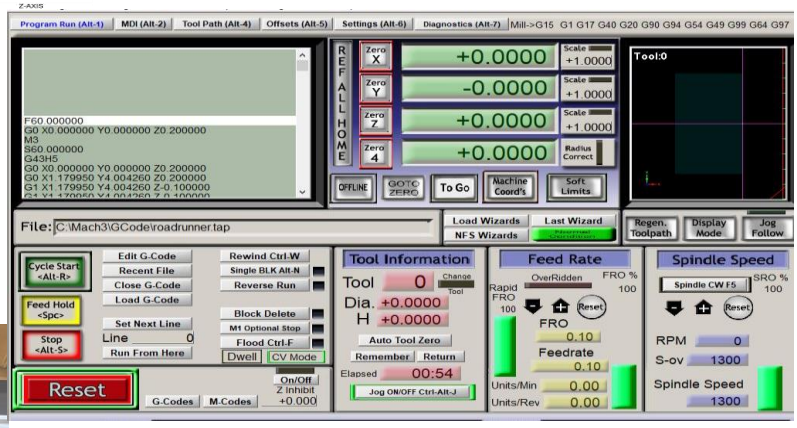

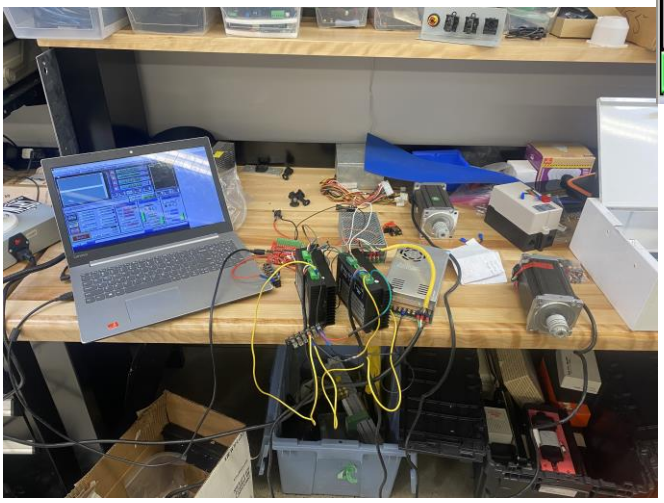

Bench-testing of the wiring diagram above was done to verify it's functionality. The application through software was tested and limit-switch was also successfully tested.

SHAFT ANALYSIS & DESIGN

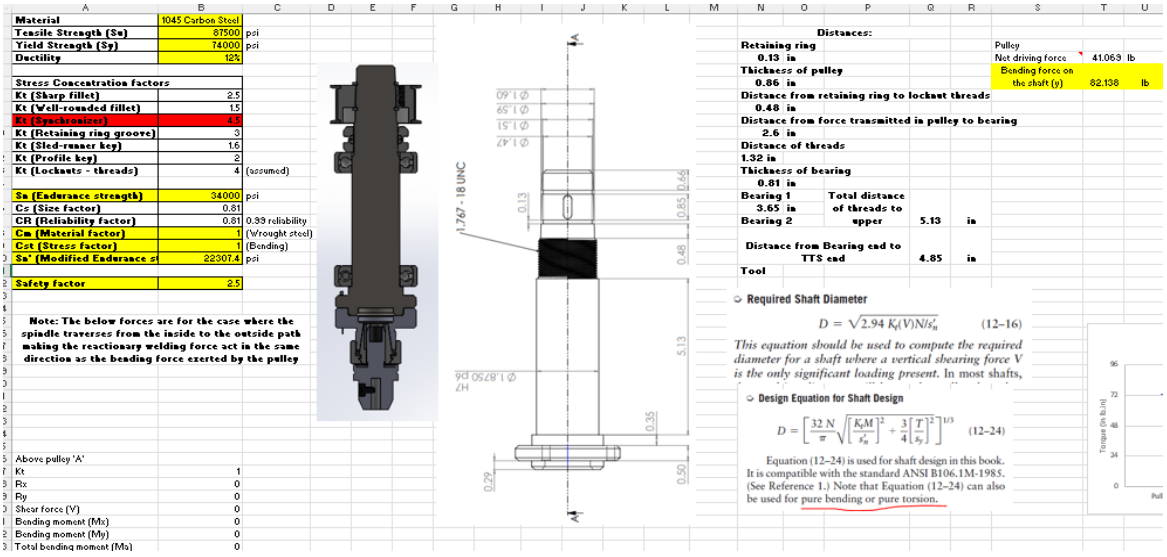

Material	1045 Carbon Steel	
Tensile Strength (Su)	87500	psi
Yield Strength (Sy)	74000	psi
Ductility	12%	
Stress Concentration factors		
Kt (Sharp fillet)	2.5	
Kt (Well-rounded fillet)	1.5	
Kt (Synchronizer)	4.5	
Kt (Retaining ring groove)	3	
Kt (Sled-runner key)	1.6	
Kt (Profile key)	2	
Kt (Lockuts - threads)	4	(assumed)
Se (Endurance strength)	34000	psi
Cs (Size factor)	0.81	
CR (Reliability factor)	0.81	0.99 reliability
Cm (Material factor)	1	(Wrought steel)
Cst (Stress factor)	1	(Bending)
Se' (Modified Endurance st	22307.4	psi
Safety factor	2.5	

Note: The below forces are for the case where the spindle traverses from the inside to the outside path making the reactionary welding force act in the same direction as the bending force exerted by the pulley

Above pulley 'A'	
Kt	1
Rx	0
Ry	0
Shear force (V)	0
Bending moment (Mx)	0
Bending moment (My)	0
Total bending moment (Ms)	0

Distances:

Retaining ring			
0.13	in		
Thickness of pulley			
0.86	in		
Distance from retaining ring to lockout threads			
0.48	in		
Distance from force transmitted in pulley to bearing			
2.6	in		
Distance of threads			
1.32 in			
Thickness of bearing			
0.81	in		
Bearing 1	Total distance of threads to upper		
3.65 in			
Bearing 2		5.13	in
Distance from Bearing end to TTS end		4.85	in
Tool			

Pulley		
Net driving force	41.069	lb
Bending force on the shaft (y)	82.138	lb

Required Shaft Diameter

$$D = \sqrt{2.94\, K_t(V)N/s'_n} \qquad (12\text{–}16)$$

This equation should be used to compute the required diameter for a shaft where a vertical shearing force V is the only significant loading present. In most shafts,

Design Equation for Shaft Design

$$D = \left[\frac{32\,N}{\pi}\sqrt{\left[\frac{K_t M}{s'_n}\right]^2 + \frac{3}{4}\left[\frac{T}{s_y}\right]^2}\right]^{1/3} \qquad (12\text{–}24)$$

Equation (12–24) is used for shaft design in this book. It is compatible with the standard ANSI B106.1M-1985. (See Reference 1.) Note that Equation (12–24) can also be used for pure bending or pure torsion.

Hand Calculations to define shaft parameters (min. Dia.)

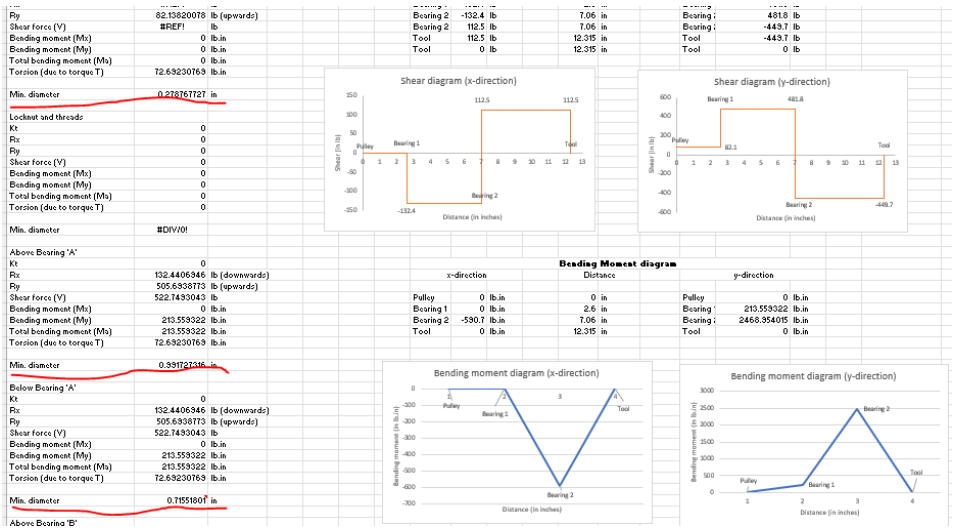

Ry	82.13820078	lb (upwards)
Shear force (V)	#REF!	lb
Bending moment (Mx)	0	lb.in
Bending moment (My)	0	lb.in
Total bending moment (Ms)	0	lb.in
Torsion (due to torque T)	72.63230769	lb.in
Min. diameter	0.278767727	in
Lockout and threads		
Kt	0	
Rx	0	
Ry	0	
Shear force (V)	0	
Bending moment (Mx)	0	
Bending moment (My)	0	
Total bending moment (Ms)	0	
Torsion (due to torque T)	0	
Min. diameter	#DIV/0!	
Above Bearing 'A'		
Kt	0	
Rx	132.4406946	lb (downwards)
Ry	505.6938773	lb (upwards)
Shear force (V)	522.7493043	lb
Bending moment (Mx)	0	lb.in
Bending moment (My)	213.559322	lb.in
Total bending moment (Ms)	213.559322	lb.in
Torsion (due to torque T)	72.63230769	lb.in
Min. diameter	0.391727316	in
Below Bearing 'A'		
Kt	0	
Rx	132.4406946	lb (downwards)
Ry	505.6938773	lb (upwards)
Shear force (V)	522.7493043	lb
Bending moment (Mx)	0	lb.in
Bending moment (My)	213.559322	lb.in
Total bending moment (Ms)	213.559322	lb.in
Torsion (due to torque T)	72.63230769	lb.in
Min. diameter	0.715518017	in
Above Bearing 'B'		

Bearing 2	-132.4	lb	7.06	in	
Bearing 2	112.5	lb	7.06	in	
Tool	112.5	lb	12.315	in	
Tool	0	lb	12.315	in	

Bearing 1	481.8	lb
Bearing 2	-449.7	lb
Tool	-449.7	lb
Tool	0	lb

Bending Moment diagram

x-direction			Distance		y-direction		
Pulley	0	lb.in	0	in	Pulley	0	lb.in
Bearing 1	0	lb.in	2.6	in	Bearing 1	213.559322	lb.in
Bearing 2	-530.7	lb.in	7.06	in	Bearing 2	2468.954015	lb.in
Tool	0	lb.in	12.315	in	Tool	0	lb.in

Calculation of Bending Moment, Torque & Shear in shaft at different points due to forces generated during FSW.

Final Shaft CNC Manufactured based on above analytical and design specifications.

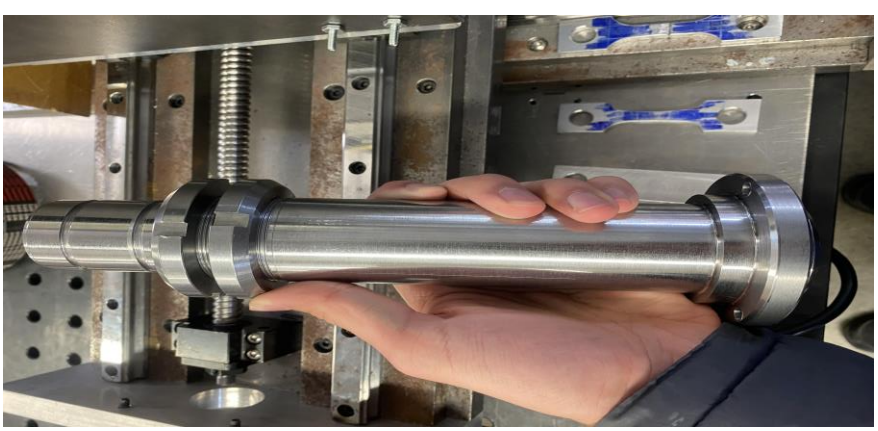

FUSION 360 CAM

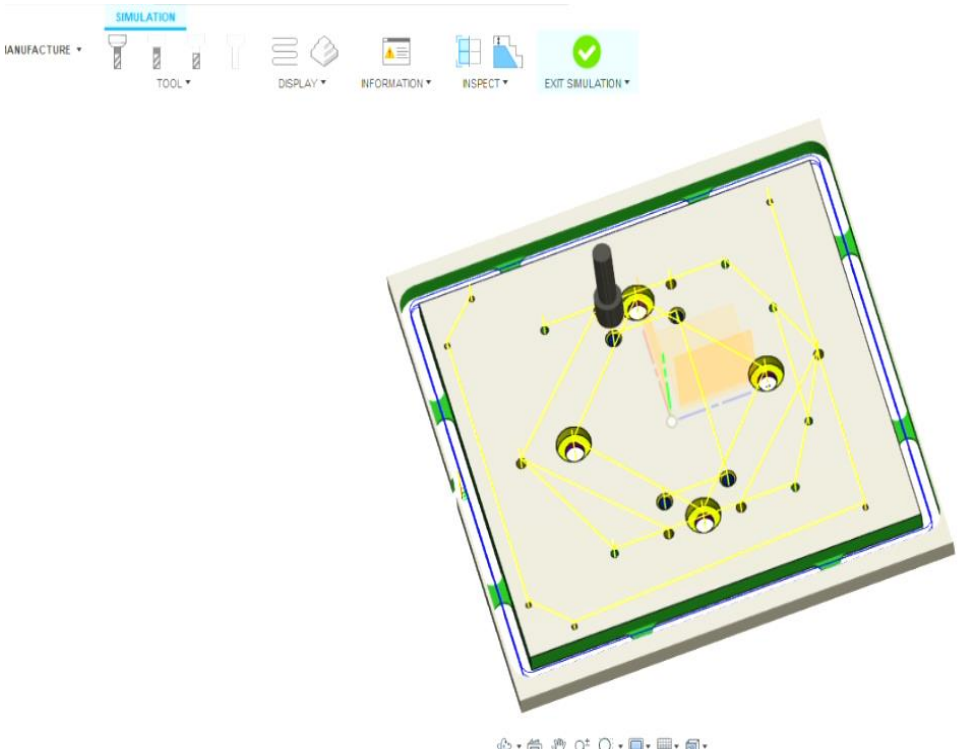


```
%24250201,MX--,
; T1 D=0.25 CR=0 - ZMIN=-0.1 - FLAT END MILL
N10 G90 G94 G17
N15 G70
N20 G53 G0 Z0
; TRACE2
N25 T1
N30 M6
N35 S1500 M3
N40 G17 G90 G94
N45 G54
N50 G0 X0 Y4.8
N55 G43 Z1.25
N60 G1 Z0.05 F2
N65 Z-0.1 F0.1
N66 G4 K400
N70 Y0.6 F2
N75 Z0.05 F5
N80 Z1.25 F2
N85 M5
N90 G53 G0 Z0
N95 G53 G0 X0 Y0
N100 M30
%
```

CAM Simulation with example G-Code generated in Fusion 360 for the CNC manufacture of the fixture plate part of the clamping assembly of the FSW Machine.

Below is the result of the part which was CNC Manufactured.

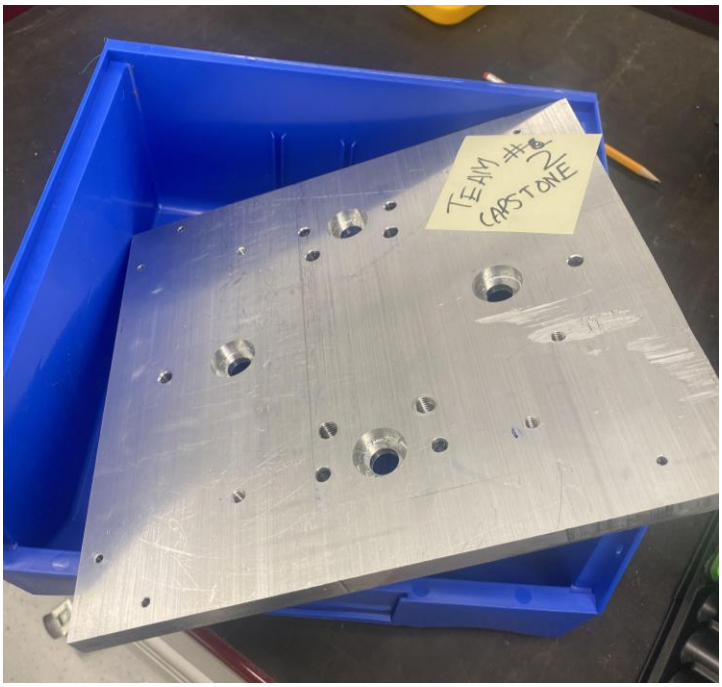

OTHER DELIVERABLES – BOM, Electrical Assembly Concept

BOM

Component	QTY	Specifications/Comments
NEMA 34 86HS15 Stepper motor	3	12.5 N.m. torque; 1.8^0 phase angle
MA860H Stepper driver	3	24 – 110 VDC; 6.0 A max current output
48V 21 A PSU	1	1000 W PSU (=3*7.5*48)
24V 2.5 A PSU	1	60W PSU (for inputs or controller)
MACH3 Motion controller board	1	4-Axis Controller/breakout board
14 or 16 Gauge wire	Variable	For max. current carrying capacity of 12 – 15 Amps
Magnetic contactor switch	1	With Start, stop and e-stop button
Spindle Motor	1	Vevor 1.5 HP; 15.2A/115V Single-phase motor
Limit switches	6	NC type terminals
8 A fuse	3	For preventing current overload on the stepper drivers
Fans	2	1.13 m^3/min airflow to cool electronics
4-pin connectors	Variable	For wiring stepper motors; other signal wires to drivers (are shielded as well)
Other wiring equipment	Variable	Cutters; strippers; tape; enclosure box; drills

49
Meezan Khoja

Bill of Materials for the 3-Axis CNC Subsystem of the FSW Machine.

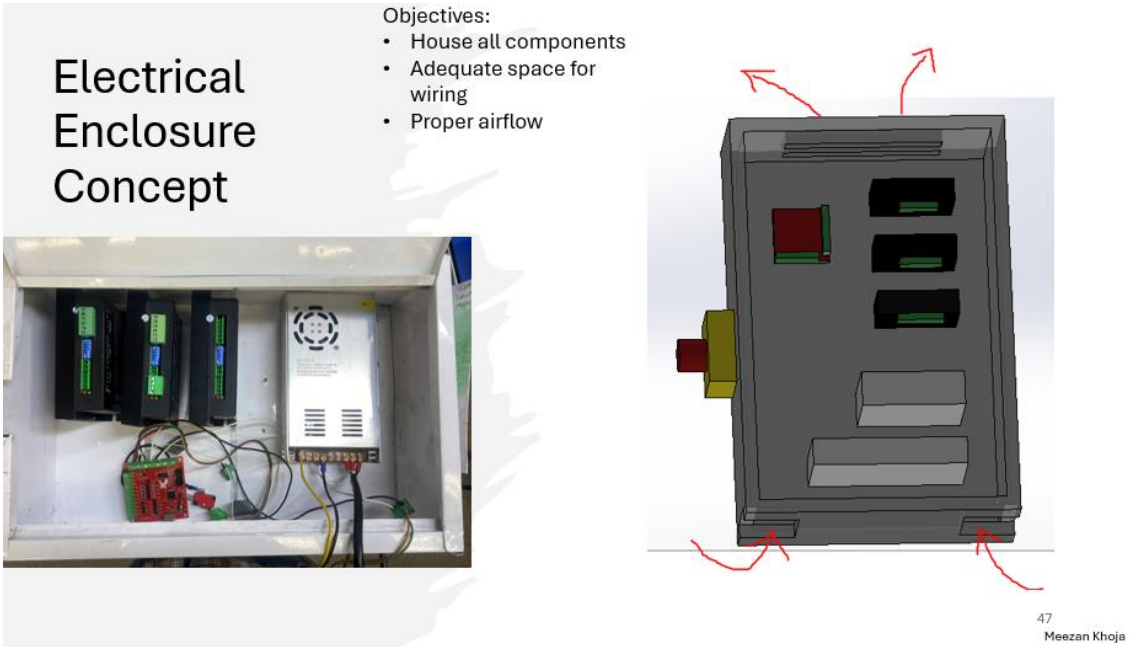

Example Enclosure concept proposed to house the electrical components of the CNC.